Brooks® GCS400 Series Low Profile Cylinder Scales

Compact size with high accuracy

» Superior resistance to corrosive gases
» Robust design withstands real-world handling
» Allows cylinder and vessel depletion to lowest levels, reducing cost of ownership and increasing equipment utilization

Product Description

The Brooks GCS400 series low profile cylinder scale is designed to stand up to industry-grade abuse. A heavy gauge stainless steel housing provides superior resistance to harsh chemical and corrosive environments. The GCS400 series scale is also designed to enable the depletion of cylinder and vessel contents to the lowest possible levels, reducing your downtime and material costs.

In addition to rugged reliability, these scales feature an environmentally sealed load-cell that precisely weighs cylinders in all environments. The GCS400 series is offered in 9.25" x 9.25" size with 100 lbs and 300 lbs full scale ratings.

Features

- Heavy gauge stainless steel housing, base plate and load cell
- Single environmentally sealed load cell
- Ultra-low profile platform for ease of use
- 0 to 5 VDC and 4 to 20 mA Outputs
- CE compliant
- Safe for use in hazardous environments

  US Rating:
  - Safe for Class I, II, III Div 1, 2
  - Gr A-G, Temp Rating T4.

  European Rating:
  - Ex ic II C T4 Gc

Applications

Gas delivery systems and tools including:

- Gas distribution systems.
- Chemical delivery systems.
- Facility maintenance.

Product Configurations

Ordering Information

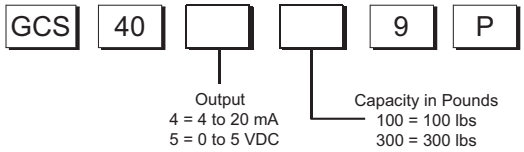

Product Dimensions

GCS 404 Electrical Drawings

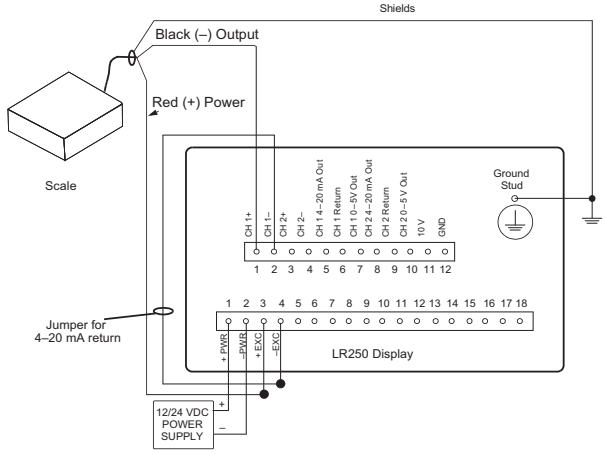

LR250™ Display / Scale System

GCS 405 Electrical Drawings

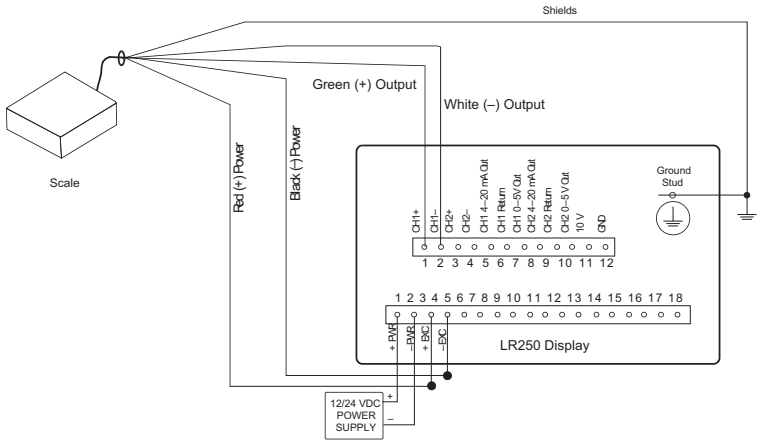

LR250™ Display / Scale System

Brooks GCS400 Series Low Profile Cylinder Scales Specifications

Material	Stainless steel platform, base and sealed load cell. Rubber shock pads. Double-shielded cable for increased RFI protection.

Max Supply Current

GCS404	26 mA
GCS405	20 mA

Output

GCS404	4 to 20 mA
GCS405	0 to 5 VDC

Input Power	24 VDC nominal, 11 to 30 VDC
Linearity	±0.1% full scale
Repeatability	±0.1% full scale
Stability	±0.1% full scale per 30 days
Overall Cable Length	25 feet (8 meters)
Temperature Range	Operating: –22 to 150°F (–30 to 65°C) Compensated: 14 to 122°F (–10 to 50°C)
Capacities	100 lbs and 300 lbs (45 kg and 135 kg)
Dimensions	9.25" x 9.25" x 1.4" (235 mm x 235 mm x 36 mm)
Maximum Overload	150% full scale
Approximate Shipping Weight	15 lbs (6.81 kg)

Intrinsic Safety Information

Safe for use in hazardous environments

US Rating:	Safe for Class I, II, III Div 1, 2 Gr A-G, Temp Rating T4
European Rating:	EEx ia IIC T4 (Ta= -20°C to 60°C) SIRA 03ATEX 2587

Brooks is a trademark of Brooks Instrument, LLC.
All other products or service names mentioned in this document may be trademarks of the companies with which they are associated. System descriptions are typical and subject to change without notice.

DS-PR-GCS400-eng 01/11
(supersedes PF194 Rev F 02/06)

Brooks Instrument
407 West Vine Street
P.O. Box 903
Hatfield, PA 19440-0903 USA
T (215) 362 3700
F (215) 362 3745
E-Mail BrooksAm@BrooksInstrument.com
www.BrooksInstrument.com

Brooks Instrument
Neonstraat 3
6718 WX Ede, Netherlands
T +31 (0) 318 549 300
F +31 (0) 318 549 309
E-Mail BrooksEu@BrooksInstrument.com

Brooks Instrument
1-4-4 Kitasuna Koto-Ku
Tokyo, 136-0073 Japan
T +81 (0) 3 5633 7100
F +81 (0) 3 5633 7101
E-Mail BrooksAs@BrooksInstrument.com

©Copyright 2011 Brooks Instrument, LLC All rights reserved. Printed in U.S.A.