Model BV88 Digital Control Valve

Description

The Model BV88 Digital Control Valve is designed to provide precise flow rate control and batch delivery of fluid products when used with an electronic batch control device. The valve is controlled by the electronic preset for low flow start up, high flow rate control, low flow shutdown, and final shut-off. This also provides for maximum flowmeter accuracy by maintaining a constant flow rate with varying line pressures. The Model BV88 features an external pilot control loop that consists of a normally-open solenoid pilot, a normally-closed solenoid pilot, strainer, and opening/closing speed controls.

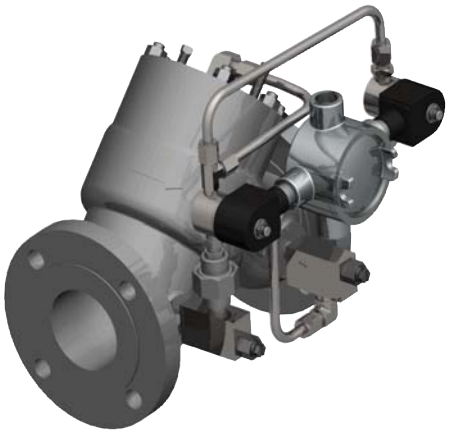

WARNING

Do NOT operate this instrument in excess of the specifications listed. Failure to heed this warning could result in serious injury and/or damage to the equipment.

Principle of Operation

The valve is pilot operated on a balanced piston principle. It is spring biased to a closed position. Pressure differential overcomes the force of the spring, causing the main valve to open and establish flow. The pilot control(s) vary the pressure on the spring side of the piston for position.

Applications

Batch control with flow limiting capabilities when used with electronic presets capable of digital control.

Design Features

- Precision flow rate and batch control
- Modular construction -all internal parts including seat ring can be removed with the cylinder assembly without disturbing line connections.
- No diaphragms or stuffing boxes
- 45° body design assures high capacity
- Positive shut-off
- Linear control characteristics with uniform response speed
- Automatic check valve - no reverse flow
- Fail-safe closes on loss of electrical power
- Characterized ports for better low flow response

Maximum Operating Pressure Differential (M.O.P.D.) Across Pilots

150 lb. Standard - 100 PSID (690 kPa)
Optional - 150 PSID (1,035 kPa)
Optional - 285 PSID (1,967 kPa)
300 lb. Standard - 740 PSID (5,106 kPa) *(3”-6” Only)*

Materials of Construction

Main Valve Body: Steel-ASTM-A216-GR-WCB
Main Valve Cylinder: 17-4 Stainless Steel, Heat Treated
Main Valve Piston: Stainless Steel
Seat Ring: Stainless Steel
O-Rings: Viton Standard (Other elastomers available)
Other Internal Parts: Stainless Steel
Pilot Valve Strainer/Needle Valve Strainer: Standard: Steel
Tubings and Fittings: Standard: Steel

Standard Equipment

- Opening and closing speed controls
- Self-cleaning strainer (Pilot Inlet)
- Stainless steel solenoid pilots

Optional Equipment

- Manual Override
- Thermal Relief

Recommended Spare Parts

O-Rings

Flange Connections

Valve Size	Connections	Max Working Pressure @100F
2"-6"	150 lb. ANSI	285 PSI
3"-6"	300 lb. ANSI	740 PSI

***Temperature Range** : -20F to 150F (-29C to 66C) Optional 250F (121C)*

Dimensions (For Certified Dimensional Prints - Consult Factory)

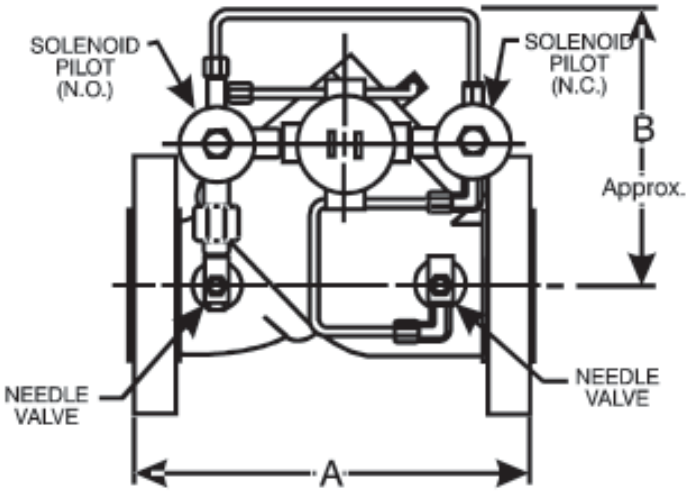

Valve Size	mm / Inches	A Dimensions 150 lb.	A Dimensions 300 lb.	B Dimensions 150 & 300 lb.
2"	mm	260	267	280
	Inches	10 1/4	10 1/2	11
3"	mm	279	333	286
	Inches	11	13 1/8	11 1/4
4"	mm	330	368	292
	Inches	13	14 1/2	11 1/2
6"	mm	432	454	346
	Inches	17	17 7/8	13 3/8

Shipping Weight and Volume (Approximate)	
2"	69 lbs. @ 3 Cu. Feet 31.3 kgs. @ .085 Cu. Meters
3"	105 lbs. @ 2.36 Cu. Feet 47.63 kgs. @ .067 Cu. Meters
4"	140 lbs. @ 2.51 Cu. Feet 63.5 kgs. @ .071 Cu. Meters
6"	250 lbs. @ 4.84 Cu. Feet 113.4 kgs. @ .137 Cu. Meters

Ordering Information

In order to accurately process an order, such information as product to be controlled, product viscosity, product temperature range, ambient temperature range, rate of flow, operating pressure, and optional features needed must be specified by the customer.

The contents of this publication are presented for informational purposes only, and while every effort has been made to ensure their accuracy, they are not to be construed as warranties or guarantees, express or implied, regarding the products or services described herein or their use or applicability. Brodie Meter Co., LLC reserves the right to modify or improve the designs or specifications of such products at any time without notice.

BRODIE International

19267 Highway 301 North (30461)
PO Box 450 • Statesboro, GA 30459-0450
Phone: (912) 489-0200 • Fax: (912) 489-0294
www.brodieintl.com

Represented locally by Ernie Graves Company :: (918) 584-4707 :: info@ErnieGraves.com