Air Eliminators and Combination Air Eliminators Strainers

Description

Air Eliminators and Combination Air Eliminator Strainers are designed to provide separation, elimination and prevention of air in piping systems for a variety of installations and conditions.

Positive displacement and turbine meters, being volumetric measuring devices, cannot differentiate between liquid, air and vapor. Although the air content, in most instances, is small when compared with the product, it will contribute to measurable error. Large amounts of free air or vapor entrapped in a piping system, not only compromises meter accuracy but can lead to overspeeding of the measuring unit, creating excessive wear or possible unit failure. To insure accurate liquid measurement, it is necessary to remove all vapor and free all entrained air from the system prior to entry into the measuring unit.

SC-20, SC-24, SC-30

DA-3-150 Combination (Illustration)
DA-3-4-150 Combination
DA-6-4-150 Combination
DA-6-150 Combination

RL-24, RL-30,
RL-36, RL-48

SC Combination

Design Features

- High capacity air elimination provides maximum meter protection and superior measurement accuracy
- Large screen area means less frequent cleaning
- Vertical tank facilitates installation
- Wide variety of materials, screen sizes and pressure ratings
- Easy maintenance

Principle of Operation

Air Eliminators decrease the velocity of the flowing stream and bring the liquid to a state of relative calm so that air bubbles or vapor will rise. As air and vapor collect in the top of the vessel, liquid volume is displaced (Reference Figure 1).

Figure 1: Principle of Operation

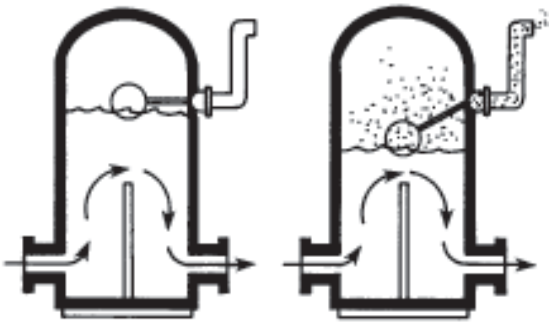

Once displaced to a predetermined point, a float-operated valve opens and the accumulated air and vapor is discharged from the tank. Liquid level then rises, causing the float-operated valve to close. Discharge rate is regulated by back pressure on the outlet side of the eliminator. If sufficient pressure differential is not available to maintain a proper rate, a back pressure valve should be installed.

WARNING

Do NOT operate this instrument in excess of the specifications listed. Failure to heed this warning could result in serious injury and/or damage to the equipment.

Materials of Construction

Combination Strainer/Air Eliminator with SC Eliminator Head:

150 psi: Carbon steel body with steel SC Eliminator Head

300 psi: Carbon steel body with ductile iron/ steel 180120 Eliminator Head

SC Combination: Head and Body, Aluminum only

Applications

In most applications, free air is eliminated without difficulty. Air which has become entrained in the product and carried along with the stream, however, must be separated from the liquid product and collected as free air before it can be discharged effectively. Entrained air in gasoline and low viscosity products separates and rises to the surface quite rapidly when the liquid velocity is decreased sufficiently. As viscosity increases, the rate of separation and rise of entrained air decreases and more retention time is required to effect surface operation.

Because tank size is a consideration in the storage and dispersal of collected air and vapor, it is not always economical to remove entrained air from the system. When considering installations handling such products as heavy oils, it is usually far more economical to prevent the entrance of entrained air rather than eliminate it.

Products such as fuel oil, diesel oil and kerosene have a tendency to foam, causing air to be discharged in the form of vapor. Petroleum products in this form are hazardous when discharged to the atmosphere and, for this reason, require large air eliminators to accommodate increases in surface tension.

Sources of Air or Vapor in Piping Systems

Conditions leading to severe air problems can often be eliminated or improved at the design stage, or through a comprehensive preventive maintenance program. Factors frequently contributing to air and vapor problems include:

- Pumping into or out of storage through the same line
- Allowing the formation of vortex conditions in low levels of product
- High suction vacuums can pull in finely divided air through packing glands
- Above-ground or heat-absorbing lines exposed to the sun can cause vaporization
- High pressure drop across valves can cause release of dissolved gases
- Lack of or improperly placed check valves can allow lines to partially drain during idle periods
- A suction vacuum that is too high for a volatile product
- Allowing a storage tank to become completely empty

Selection of the Air Elimination Device

Air Eliminators for a given job should be selected on the basis of flow rate, viscosity and the magnitude of the air problem incurred. Normally, the problems incurred that require the elimination of free air can be classified in one of three conditions.

Condition One: Venting Free Air from a Piping System - Starting a New Installation or Filling a System After Drainage

In most cases, a simple air elimination device combined with a strainer will perform satisfactorily and is the most economical method. This combination offers protection of the meter against intrusion of foreign material and eliminates free air that could cause meter inaccuracy.

CAUTION: During start-up or after maintenance, slowly purge the line until it is filled with liquid and all air and vapor have been removed.

Condition Two: Moderate Amounts of Air Requiring a Separate Air Eliminating Vessel and Venting Device

In applications involving moderate amounts of free or entrained air or when highly viscous products are being measured, an elimination tank is recommended for proper retention time. In Condition One the strainer body allows very little time for air to be released to the surface. Condition Two, for moderate to heavy concentrations of air, requires a

The accompanying graph illustrates the approximate amount of free air that can be discharged through Air Eliminator Heads at various pressures existing within the collection tank.

EXAMPLE: A 30 psig tank pressure would be required to discharge 180 ft.3/min. free air through a SC eliminator head. Sufficient back pressure on the air eliminator must be present for the air eliminator head to function and discharge properly at any given flow rate.

To determine the approximate relationship between gallons per minute and cubic feet per minute, consider the following formula:

gpm = 7.5 x ft.^{3}/min. OR ft.^{3}/min. = gpm/7.5

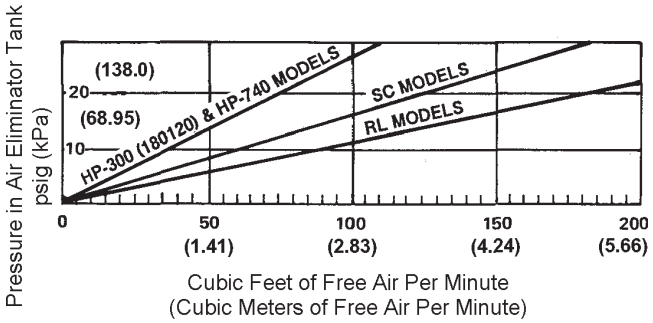

Figure 2: Air Capacity of Air Eliminator Head Assemblies

reduction in product velocity as well as more retention time before release of air or vapor, thus the need for a larger receiving/holding tank. Applications common to this condition include those which have allowed the product tank to completely empty, failed to properly close a valve, very low storage tank levels or have been loaded and unloaded through a common line. Condition Two is limited to those applications in which no high, continuous volumes of entrained gas or air may result from either system failure or human error.

Condition Three: Critical Conditions Involving Large Amounts of Air or Gas Entrainment

Typical applications may involve:

- Unloading transport trucks, tank cars or pumping from barges or tankers
- Pumping from underground storage
- Piping systems used for several different operations and products (air is introduced when changing products)
- Lines with occasional drainage between products
- Above-ground and heat-absorbing lines exposed to the sun can result in the release of solution gases and boiling of light ends where high vapor pressure products are utilized
- Pumping in and out of the same line
- High turbulence created by high liquid velocity, valves, fittings, etc.
- Viscous products greater than Number 2 Fuel Oil
- Lines blown down with compressed air or those allowed to run dry

Air Eliminator Selection Tables

Tables 1, 2 and 3 below, provide a general basis for selecting type and size and list the three most common problem areas.

All information listed has been developed using light oils such as gasoline, kerosene, light fuel oil, diesel products etc. Contact the factory for applications of higher viscosity in which air problems may require special engineering attention.

Vessel Loading and Off-Loading

Free air introduced into the piping system caused by vortexing, stripping bottom product or simply unloading mobile tankers or sea-going vessels is a problem which requires special attention.

The unloading of rail cars or road tankers (Figure 3) often requires the air eliminator vessel to have a liquid level float as an interface to close the discharge valve downstream of the meter. This stops all flow when liquid level drops to a predetermined point in the vessel. The valve must have adequate closing time to minimize the introduction of surges yet fast enough to eliminate the air being displaced in to the metering system.

For off-loading seagoing vessels (Figure 3), secondary or multiple air release devices may be required to assist with air elimination before entering the metering system.

Contact the factory for recommended procedure when flow rate exceeds standard vessel size or when such conditions exist.

Installation

Installation of the air eliminator must be on the upstream inlet side of the meter on the discharge side of the pump. Discharge may be vented to the meter outlet, back to storage, or into a sump, condensation drum or tank.

CAUTION: Local, state and federal regulations should be checked prior to venting to atmosphere or an open vessel.

Table 1, Condition 1

	SC Combination			DA-3/DA-3 Combination			DA-3-4/DA-3-4 Combination			D-6 Combination			
GPM	60	100	150	200	300	400	500	600	700	800	900	1,000	1,200
IGPM	50	80	125	160	250	332	415	500	580	665	750	830	1,000
LPM	220	375	570	750	1,135	1,500	1,900	2,270	2,650	3,028	3,406	3,800	4,550
BPH	85	140	215	285	425	570	715	850	1,000	1,143	1,285	1,430	1,700
M3H	14	23	34	45	68	91	114	136	159	182	205	227	272

Table 2, Condition 2

	SC-20			SC-24			SC-30						
GPM	300	400	500	600	700	800	900	1,000	1,100	1,200	1,300	1,400	1,500
IGPM	250	332	415	500	580	665	750	830	913	1,000	1,079	1,162	1,250
LPM	1,135	1,500	1,900	2,270	2,650	3,028	3,406	3,800	4,164	4,550	4,920	5,299	5,678
BPH	425	570	715	850	1,000	1,142	1,285	1,430	1,572	1,700	1,857	2,000	2,140
M3H	68	91	114	136	159	182	205	227	250	272	295	318	340

Table 3, Condition 3

	RI-24			RL-30			RL-36				RI-48				
GPM	100	300	600	800	1,200	1,500	1,700	2,000	2,300	2,500	2,700	2,900	3,100	3,300	3,500
IGPM	80	250	500	665	1,000	1,250	1,416	1,666	1,916	2,083	2,249	2,416	2,582	2,749	2,916
LPM	375	1,135	2,270	3,028	4,550	5,678	6,435	7,570	8,706	9,463	10,220	10,977	11,734	12,490	13,248
BPH	140	425	850	1,142	1,700	2,140	2,428	2,857	3,286	3,571	3,857	4,143	4,429	4,714	5,000
M3H	23	68	136	182	272	340	386	454	522	568	613	658	704	744	795

Note: the RL Head does not open at a differential pressure over 60 psi (4 bars).

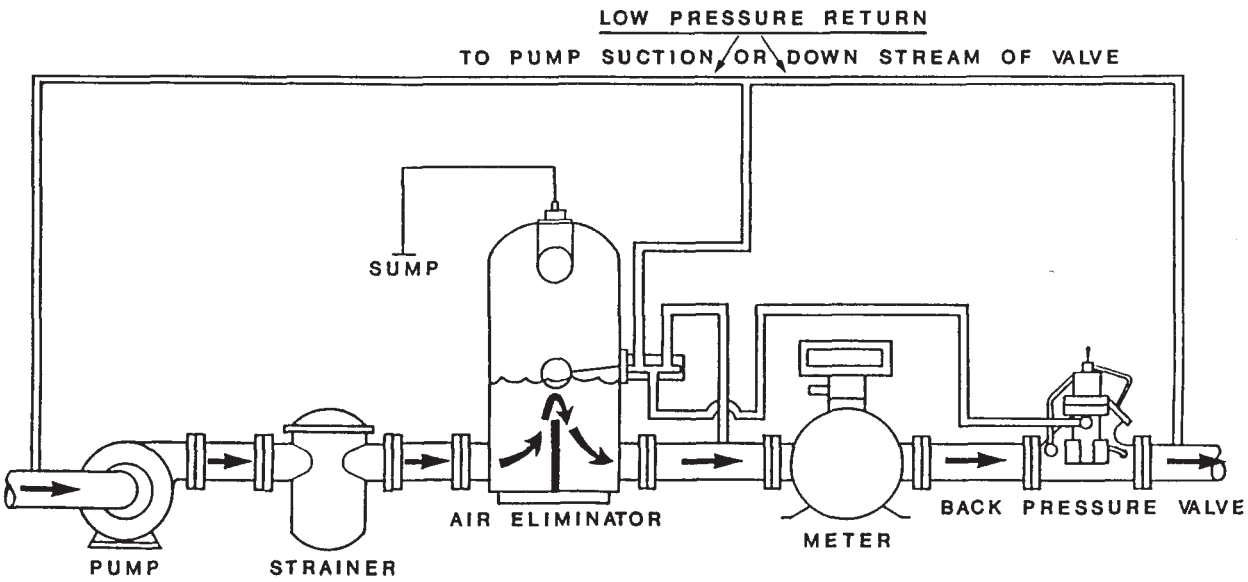

Rail Car and Road Tanker Off-Loading

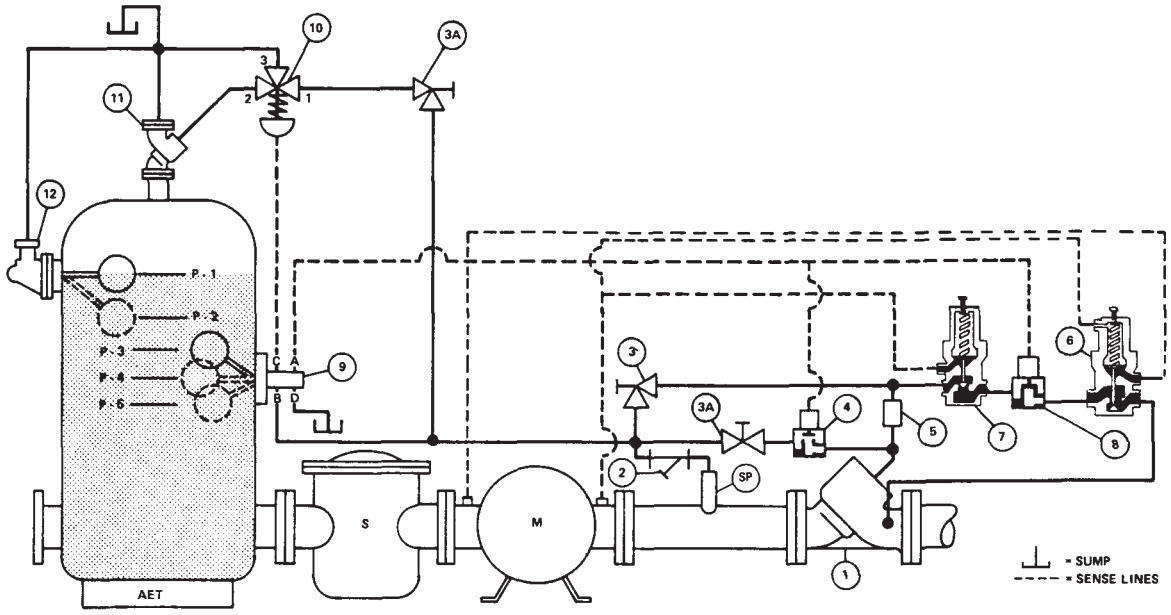

Marine Tanker Off-Loading

LEGEND

1 - MAINLINE VALVE
2 - STRAINER
3 - NEEDLE VALVE-SENSITIVITY
3A - NEEDLE VALVE-CLOSING SPEED
4 - NORMALLY OPEN (N.O) ON-OFF PILOT
5 - OPENING SPEED CONTROL
6 - FLOW CONTROL PILOT
7 - NORMALLY CLOSED (N.C.) BACK PRESSURE PILOT
8 - NORMALLY CLOSED (N.C.) ON-OFF PILOT
9 - 3-POSITION FLOAT PILOT
10 - 3-WAY ON-OFF PILOT
11 - AIR EXHAUST VALVE
12 - AIR RELEASE ASSEMBLY
M - METER AET-AIR ELIMINATION TANK
S - STRAINER SP-STAND PIPE

Figure 3: Rail Car and Tanker Off-Loading and Marine Tanker Off-Loading

Table 4: Certified Dimensions for Combinations and Air Eliminators

		A		B		C		D		E	
	Model	Inches	mm	Inches	mm	Inches	mm	Inches	mm	Inches	mm
Combinations	SC	See Figure 4									
	DA-3-150	--	--	28	711	13 1/8	330	--	--	10 1/4	260
	D-3-300/150	--	--	27 7/8	708	15 23/32	400	--	--	10 1/8	257
	D-3-300	--	--	27 7/8	708	15 23/32	400	--	--	10 1/8	257
	DA-3-4-150	--	--	27 3/4	705	13 1/8	330	--	--	10 1/4	260
	D-3-4-300/150	--	--	27 7/8	708	15 23/32	383	--	--	10 1/8	257
	D-3-4-300	--	--	27 7/8	708	15 23/32	383	--	--	10 1/8	257
	D-6-4-150	--	--	39 1/2	1003	22 5/8	575	--	--	15 3/8	391
	D-6-150	--	--	39	991	22 5/8	575	--	--	16 1/8	410
Air Eliminators	SC-20	18 1/4	464	40	1016	23	584	--	--	10 3/4	273
	SC-24	24 1/4	616	61 5/8	1565	30	762	--	--	13	317
	SC-30	30	762	67 3/4	1721	36 1/2	914	--	--	16	406
	RL-24	24	610	64	1625	30	762	46 5/8	1184	13	330
	RL-30	30	762	71	1803	36 1/2	927	49 5/8	1260	16	406
	RL-36	36	914	79	2007	43	1096	53 5/8	1362	18	457
	RL-48	48	1219	91	2311	57	1447	57 5/8	1464	22 1/2	572

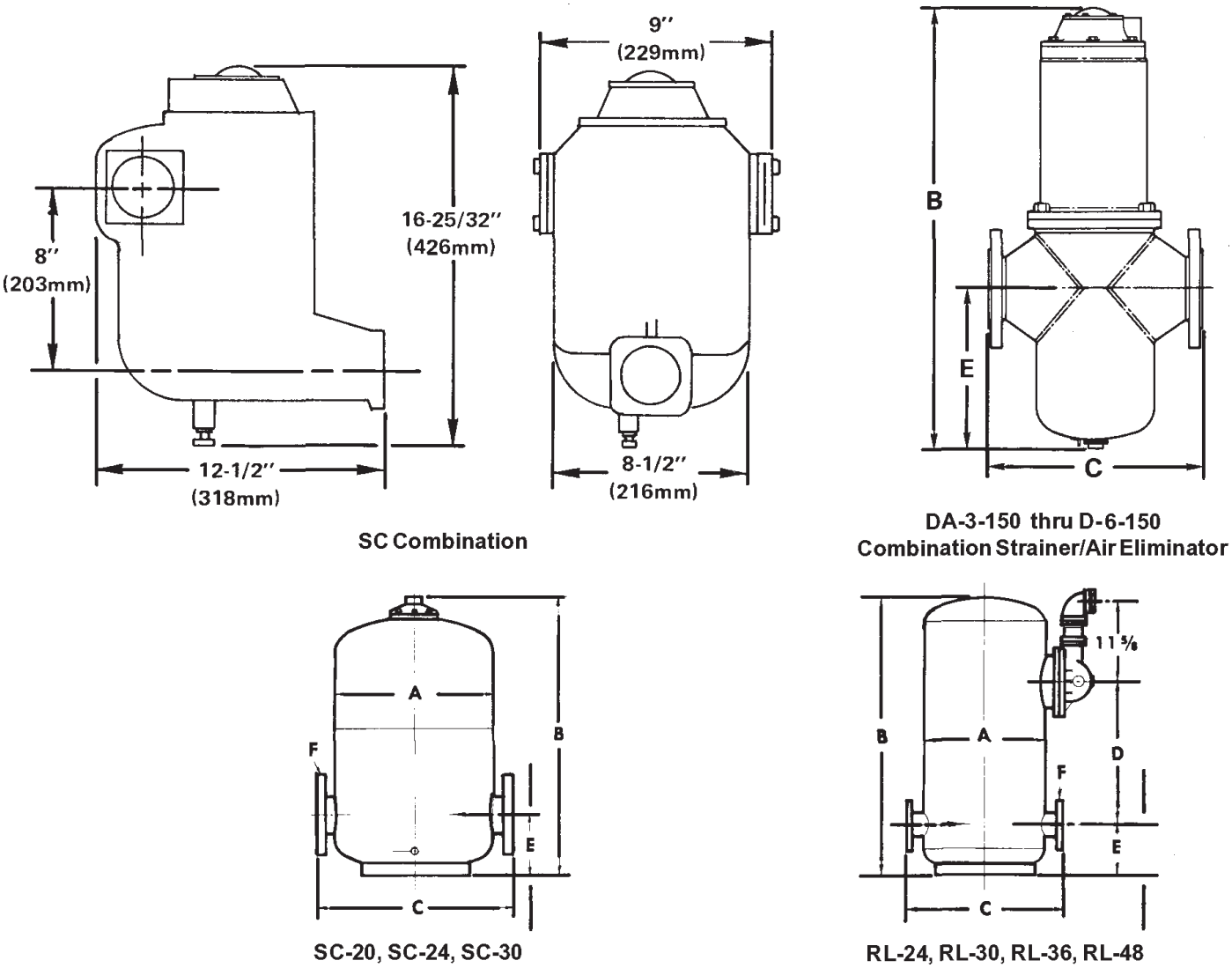

Figure 4: Dimensions for Combinations and Air Eliminators

Optional Equipment

Conversion from Strainers to Combination Air Eliminator Strainers

Existing strainers may be converted for air elimination by adding an air eliminator head assembly.

A. For Model DA-3-150, DA-3-4-150 and D-6-150 strainers, an assembly consisting of the strainer cover, air eliminator housing and air eliminator assembly may be provided for conversion.

Strainer Model Air Elimination Kit

DA-3-150 W180575

DA-3-4-150 W180575

D-6-150 W178865-001

B. For 300 psi strainers, sizes 3" and 4" an assembly consisting of the 180120 Air Eliminator Head and mounting flange assembly may be provided. (Welding of the strainer cover is required and it is necessary that a hole be cut to allow passage of fluid through the strainer to the air eliminator.) Assembly Part Number W180120 (Reference Fig. 5).

C. To convert larger strainers and strainers of other manufacturers, complete self-contained air eliminator assemblies may be provided. Mounting of these units is accomplished by the addition of a 2" pipe coupling welded onto the strainer cover. Units available include (Reference Figure 5):

180150 SC Air Eliminator Assembly for pressures up to 150 psi
180140 HP-300 Air Eliminator Assembly for pressures up to 300 psi
180140-740 HP-740 Air Eliminator Assembly for pressures up to 720 psi

Figure 5: Dimensions for Strainer Conversions

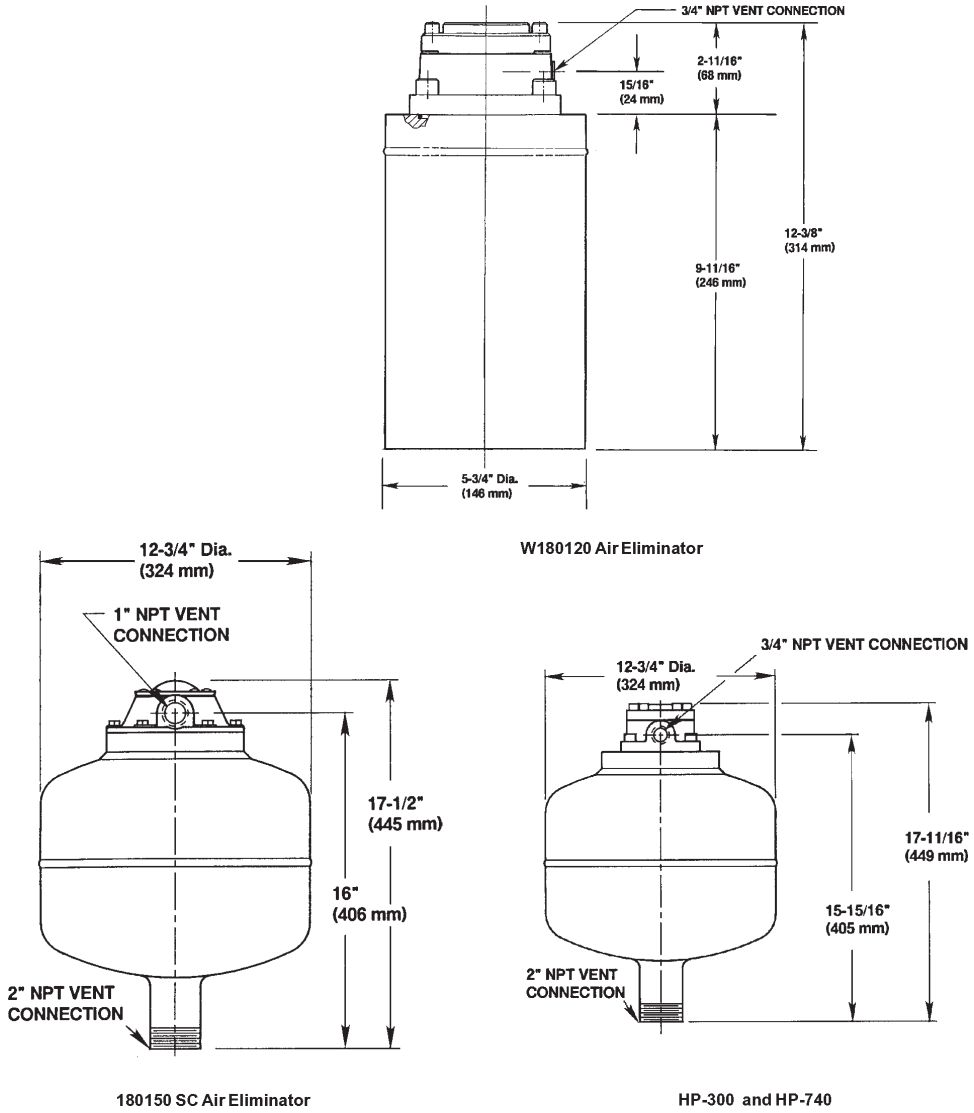

Figure 6: Assemblies for Welding Directly Into Tanks or Filters

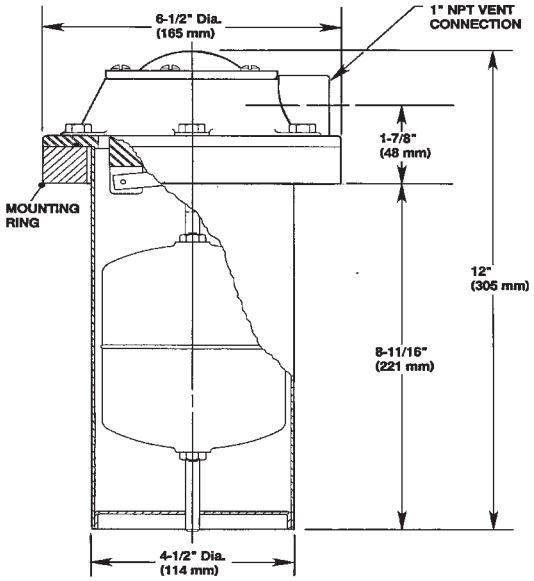

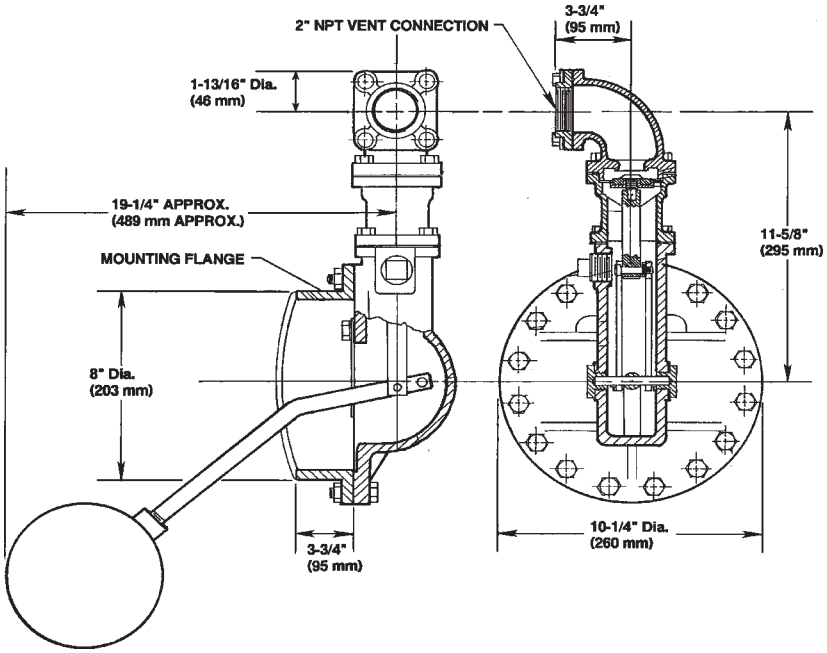

Table 5: Specifications

	Model	Head Assembly	Vent Size NPT	Drain Size	Approximate Shipping Weights		Approximate Shipping Cube	
					lbs	kg	Cubic ft	Cubic mtrs
Air Eliminators	SC-20-3	SC	1"	3/4" NPT	140	64	10.11	0.286
	SC-24-3	SC	1"	1" NPT	295	134	26.9	0.762
	SC-30-3	SC	1"	1" NPT	750	341	43.68	1.237
	RL-24-4	RL	2"	1" NPT	500	227	26.66	0.755
	RL-30-4	RL	2"	1" NPT	800	364	45.6	1.29
	RL-36-4	RL	2"	1" NPT	1200	545	70.77	2
	SC-24-6	SC	1"	1" NPT	295	134	26.9	0.762
	SC-30-6	SC	1"	1" NPT	750	341	43.68	1.237
	RL-24-6	RL	2"	1" NPT	500	227	26.66	0.755
	RL-30-6	RL	2"	1" NPT	800	364	45.6	1.29
	RL-36-6	RL	2"	1" NPT	1200	545	70.77	2
	RL-48-6	RL	2"	1" NPT	2500	1136	144.08	4.08
	SC-30-8	SC	1"	1" NPT	750	341	43.68	1.237
	RL-30-8	RL	2"	1" NPT	800	364	45.6	1.29
	RL-36-8	RL	2"	1" NPT	1200	545	70.77	2
	RL-48-8	RL	2"	1" NPT	2500	1136	144.08	4.08
	RL-36-10	RL	2"	1" NPT	1200	545	70.78	2
	RL-48-10	RL	2"	1" NPT	2500	1136	144.08	4.08
	RL-48-12	RL	2"	1" NPT	2500	1136	144.08	4.08
Combinations	SC	SC	1"	--	23	10	1.15	0.033
	DA-3-150	SC	1"	3/4" NPS	66	30	2.268	0.064
	D-3-300/150	180120	3/4"	1" NPT	120	55	2.59	0.073
	D-3-300	180120	3/4"	1" NPT	120	55	2.59	0.073
	DA-3-4-150	SC	1"	3/4" NPS	70	32	2.268	0.064
	D-3-4-300/150	180120	3/4"	1" NPT	135	61	2.59	0.073
	D-3-4-300	180120	3/4"	1" NPT	135	61	2.59	0.073
	D-6-4-150	SC	1"	1" NPT	190	87	8.52	0.24
	D-6-150	SC	1"	1" NPT	190	87	8.3	0.024
Angle	DA-3-150A	SC	1"	3/4" NPT	66	30	2.268	0.064
	DA-3-4-150A	SC	1"	3/4" NPT	70	32	2.268	0.064
	D-6-4-150A	SC	1"	1" NPT	190	87	8.52	0.24
	D-6-150A	SC	1"	1" NPT	190	87	8.3	0.235

Table 6: Flange Connections

	Model	Flange Connections	Maximum Working Pressure @ 100F	DIN Connections	Maximum Working Pressure
Air Eliminators	SC-20-3	3" 150 lb. ANSI R.F.	150 PSI	DN 80 PN 16	10.3 Bars
	SC-24-3				
	SC-30-3				
	SC-20-4	4" 150 lb. ANSI R.F.	150 PSI	DN 100 PN 16	10.3 Bars
	SC-24-4				
	SC-30-4				
	RL-24-4				
	RL-30-4				
	RL-36-4				
	SC-24-6	6" 150 lb. ANSI R.F.	150 PSI	DN 150 PN 16	10.3 Bars
	SC-30-6				
	RL-24-6				
	RL-30-6				
	RL-36-6				
	RL-48-6				
	SC-30-8	8" 150 lb. ANSI R.F.	150 PSI	DN200 PN 16	10.3 Bars
	RL-30-8				
	RL-36-8				
	RL-48-8				
	RL-36-10	10" 150 lb. ANSI R.F.	150 PSI	DN 25 PN 16	10.3 Bars
	RL-48-10				
	RL-48-12	12" 150 lb. ANSI R.F.	150 PSI	DN 30 PN 16	10.3 Bars
Combination	SC (All Aluminum)	2" NPT Companion	150 PSI	N/A	N/A
	DA-3-150	3" 150 lb. ANSI R.F.	150 PSI	DN 80 PN 16	10.3 Bars
	D-3-300/150	3" 150 lb. ANSI R.F.	285 PSI	DN 80 PN 16	16 Bars
				DN 80 PN 40	19.6 Bars
	D-3-300	3" 300 lb. ANSI R.F.	300 PSI	DN 80 PN 40	20.7 Bars
	DA-3-4-150	4" 150 lb. ANSI R.F.	150 PSI	DN 100 PN 16	10.3 Bars
	D-3-4-300/150	4" 150 lb. ANSI R.F.	285 PSI	DN 100 PN 16	16 Bars
				DN 100 PN 40	19.6 Bars
	D-3-4-300	4" 300 lb. ANSI R.F.	300 PSI	DN 100 PN 40	20.7 Bars
	D-6-4-150	4" 150 lb. ANSI R.F.	150 PSI	DN 100 PN 16	10.3 Bars
	D-6-150	6" 150 lb. ANSI R.F.	150 PSI	DN 150 PN 16	10.3 Bars
Angle	DA-3-150A	3" 150 lb. ANSI R.F.	150 PSI	DN 80 PN 16	10.3 Bars
	DA-3-4-150A	4" 150 lb. ANSI R.F.	150 PSI	DN 100 PN 16	10.3 Bars
	D-6-4-150A	4" 150 lb. ANSI R.F.	150 PSI	DN 100 PN 16	10.3 Bars
	D-6-150A	6" 150 lb. ANSI R.F.	150 PSI	DN 150 PN 16	10.3 Bars

Represented locally by Ernie Graves Company :: (918) 584-4707 :: info@ErnieGraves.com

The contents of this publication are presented for informational purposes only, and while every effort has been made to ensure their accuracy, they are not to be construed as warranties or guarantees, express or implied, regarding the products or services described herein or their use or applicability. Brodie Meter Co., LLC reserves the right to modify or improve the designs or specifications of such products at any time without notice.

19267 Highway 301 North (30461)
PO Box 450 • Statesboro, GA 30459-0450
Phone: (912) 489-0200 • Fax: (912) 489-0294
www.brodieintl.com